SWITCHING TRANSFORMERS FAEE,FAEI SERIES

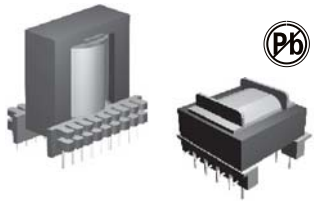

FEATURES

Possessing of high permeability
High saturation flux density
Low loss, at 100°C the power loss goes bottom

OPTIONS

Bulk packaging is standard
Custom design available

COMMON APPLICATIONS

Drive transformers
Main transformers
Smoothing chokes
General purpose use

ELECTRICAL CHARACTERISTICS

Part No.	Type	No.of FATERminal pin	Dimensions(mm) Max A	Max B	Max C	±0.3 D	±0.5 E	±0.1 F	Max. output (VA)
FAEI 8.3-A	V	6	8.5	8.5	9.0	2.5	6.0	0.5	3
FAEE 8.3-B	H	6	8.5	8.5	7.0	2.5	6.0	0.5	3
FAEE 8.3-C	H	4	8.5	9.5	9.0	5.0	6.8	0.5	3
FAEI 10-A	V	8	10.5	11.0	11.0	2.5	8.0	0.5	5
FAEI 10-B	H	8	11.0	13.0	10.5	2.5	10.5	0.5	5
FAEI 10-C	H	4	10.0	9.5	10.0	5.0	6.8	0.5	5
FAEI 12.5-A	V	10	13.0	13.0	10.0	2.5	7.5	0.6	8
FAEE 12-A	H	4	12.5	11.0	12.5	8.0	9.0	0.6	8
FAEE 13-A	V	10	13.5	13.0	12.0	2.5	8.7	0.6	9
FAEI 14-A	V	6	14.5	14.5	13.0	3.5	11.0	0.6	15
FAEE 16-A	V	6	16.5	13.5	13.0	3.0	9.0	0.6	25
FAEE 16-B	H	8	16.5	14.5	15.0	3.0	11.0	0.6	25
FAEE 16-C	H	8	16.5	14.5	15.0	3.5	12.0	0.6	25
FAEE 16-D	V	10	16.5	13.5	14.5	3.25	10.5	0.6	25
FAEE 16-F	H	10	16.5	19.0	14.0	3.2	15.5	0.8	25
FAEEL 16-A	V	10	22.0	16.5	30.0	4.0	10.3	0.6	25
FAEE 19-A	V	6	20.0	18.0	18.0	4.1	14.0	0.7	35
FAEE 19-B	V	6	20.0	16.0	18.0	4.7	11.6	0.6	35
FAEE 19-C	H	8	20.0	18.0	16.5	3.8/5	12.5	0.7	35
FAEEL 19-A	V	8	20.0	20.5	32.0	3.8/4.8	15.0	0.8	35
FAEEL 19-B	H	6	19.5	32.0	13.0	5	24.2	0.8	35
FAEEL 19-C	V	10	23.0	16.5	32.0	4	10.0	0.8	35
FAEE 20-A	H	8	20.5	19.0	13.0	5	15.0	0.8	35
FAEE 22-A	V	10	22.5	16.5	20.0	4	10.2	0.8	45
FAEE 22-B	V	8	22.5	17.0	20.0	5	12.4	0.8	45
FAEE 22-C	H	9	22.5	24.5	16.5	3.5/5	17.2	0.8	45
FAEE 25-A	V	8	25.5	18.0	22.0	5	12.4	0.8	65
FAEE 25-B	V	10	26.0	20.5	22.0	5	15.2	0.8	65
FAEE25-C	H	10	27.0	24.0	24.0	4.0/5	14.6	0.8	65
FAEEL 25-A	H	14	27.5	33.5	21.0	4.0	27.1	0.8	65

Part No.	Type	No.of FATERminal pin	Dimensions(mm) Max A	Max B	Max C	±0.3 D	±0.5 E	±0.1 F	Max. output (VA)
FAEL 25-B	V	14	27.5	21.0	35.0	4.0	15.0	0.8	65
FAEI 28-A	V	12	29.5	25.0	24.0	5.0	17.5	0.8	100
FAEI 28-B	V	10	28.5	25.0	35.0	5.0	20.0	0.8	100
FAEI 28-C	H	8	28.5	25.0	25.0	5.0	17.5	0.8	100
FAEI 30-A	V	10	31.0	22.0	26.0	5.0	17.6	0.8	155
FAEI 30-B	V	12	31.0	26.0	26.0	5.0	20.0	0.8	155
FAEE 30-A	H	10	30.5	30.0	20.5	5.0	25.0	0.8	155
FAEE 30-B	H	12	30.5	30.0	20.5	5.0	25.0	0.8	155
FAEI 33-A	V	14	34.0	28.0	30.0	5.0	22.5	0.8	200
FAEI 33-B	V	12	34.0	28.0	30.0	5.0	22.5	0.8	200
FAEI 33-C	V	16	39.0	29.0	30.0	5.0	22.5	0.8	200
FAEE 35-A	H	12	38.0	30.0	26.0	3.8/5.1	22.0	0.8	215
FAEE 35-B	V	10	35.5	26.0	28.0	5.0	20.0	0.8	215
FAEE 35-C	V	14	35.5	26.0	28.0	5.0	20.0	0.8	215
FA EL 35-A	V	15	36.5	27.5	50.0	5.0	22.5	0.8	215
FAEI 35-A	V	12	35.5	28.5	29.0	5/7.5	20.0	1.0	215
FAEI 40-A	V	12	40.5	29.0	32.0	5.0	22.5	0.8	345
FAEI 40-B	H	12	40.5	37.0	27.0	5.0	28.2	1.0	345
FAEI 40-C	V	16	42.0	28.0	35.0	5.0	22.5	0.8	345
FAEI 40-D	H	14	40.5	35.0	29.0	5.0	25.8	0.8	345
FAEE 42-A	H	16	44.5	42.0	41.5	5.0	34.0	1.0	400
FAEE 42-B	H	12	47.0	42.0	39.5	5/7.5	33.0	1.0	400
FAEE 42-C	V	18	46.0	32.5	46.0	5.0	27.5	1.0	400
FAEE 42-D	V	12	46.0	42.5	37.0	7.4	36.4	1.0	420
FAEE 42-E	V	12	43.0	40.5	45.0	5.0	32.5	1.0	420
FAEE 42-F	H	17	43.0	47.0	45.0	2.5/5	37.7	1.0	420
FAEE 42-G	V	18	46.0	38.0	47.0	5.0	30.0	1.0	420
FAEE 50-A	V	18	51.0	40.0	40.0	5.0	30.5	1.0	500
FAEE 55-A	H	20	56.0	55.0	50.5	5/7.5	45.2	1.0	814

Note: The output power is only for forward model and the frequency at 100kHz

PHYSICAL CHARACTERISTICS

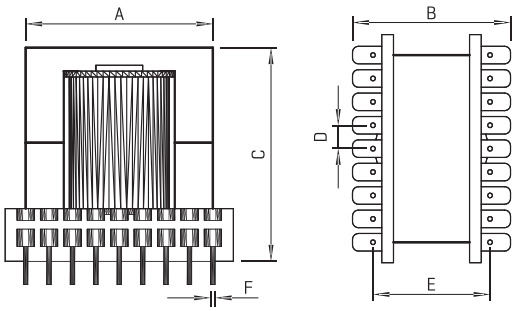

TYPE V

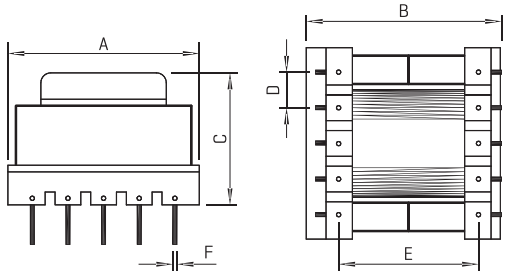

TYPE H

ALL DIMENSIONS IN MM